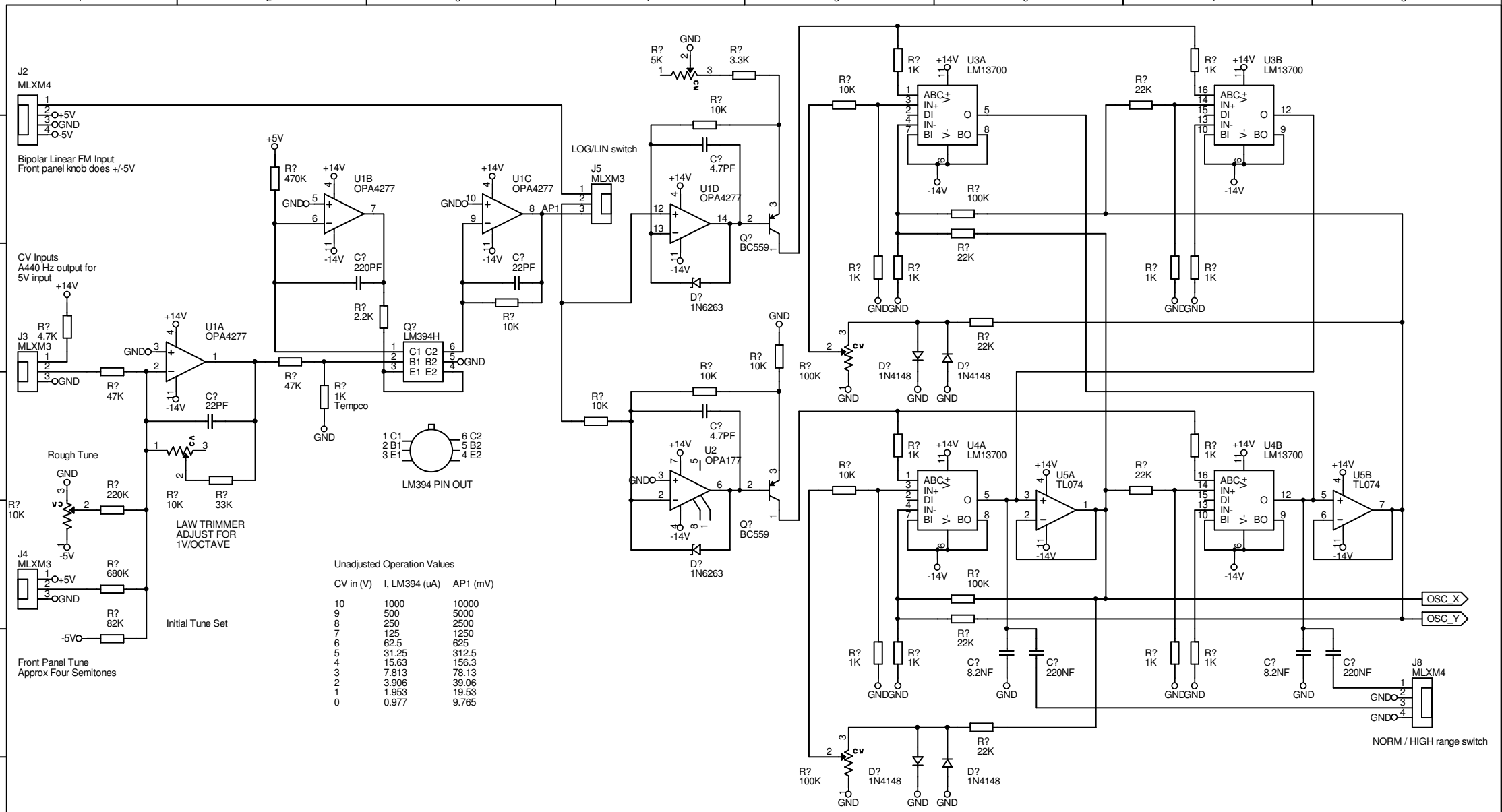

Unadjusted Operation Values

CV in (V)	I, LM394 (uA)	AP1 (mV)
10	1000	10000
9	500	5000
8	250	2500
7	125	1250
6	62.5	625
5	31.25	312.5
4	15.63	156.3
3	7.813	78.13
2	3.906	39.06
1	1.953	19.53
0	0.977	9.765

DESIGNambi02	NAME: Ambisonic Mono Panner	
FILE: ambisonic swinger02-01.sch	TITLE: oscillator	
CREATED: 08/10/013	MOD: 12/01/2007	
SHEET: 1 OF 4	REV: 1.0	SIZE: A3